GENERAL NOTES:
1. MATERIAL: **ALUMINUM, 6061-T651**
2. SPECIAL FINISH: **ANODIZE PER MIL-A-8625F, TYPE II, CLASS 2 (BLACK)**
3. SURFACE ROUGHNESS (UNLESS SPECIFIED OTHERWISE): **63 Ra** (AVERAGE MICRO-INCHES)
4. INTERPRET DIMENSIONS AND TOLERANCES PER ASME Y14.5M-1994
5. DEBURR AND BREAK ALL SHARP EDGES, MAX 0.010" (UNLESS SPECIFIED OTHERWISE)
6. PARTS ARE TO BE CLEAN AND FREE OF OIL, GREASE, AND OTHER CONTAMINANTS
7. DIMENSIONS INCLUDE ANODIZING, ELECTROPLATING, AND CHEMICALLY APPLIED FINISHES IF APPLICABLE

| REVISION HISTORY | | | | |
|---|---|---|---|---|
| ZONE | REV | DESCRIPTION | DATE | APPROVED |
| | - | INITIAL RELEASE | 10/2/2014 | arnoldj |

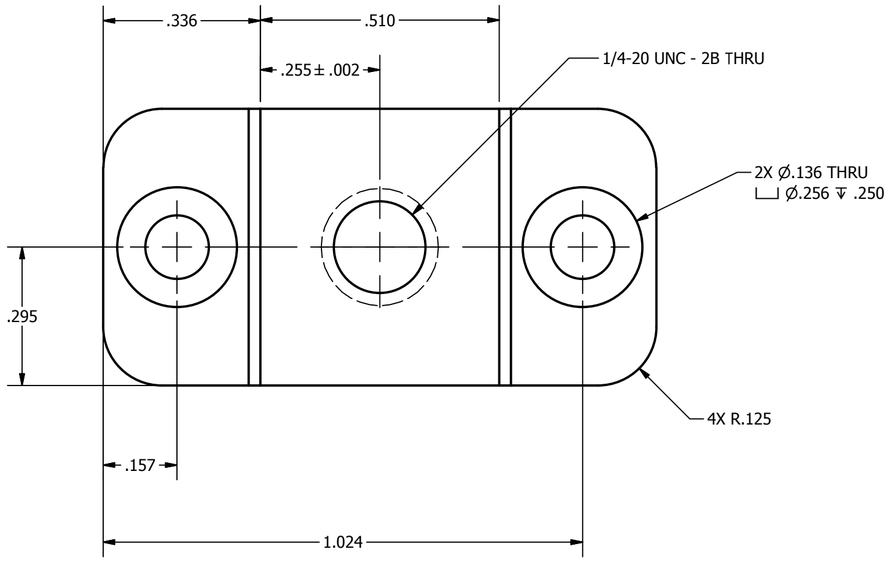


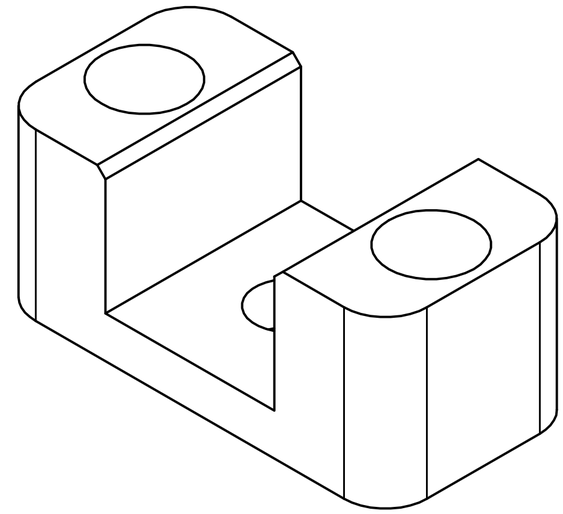

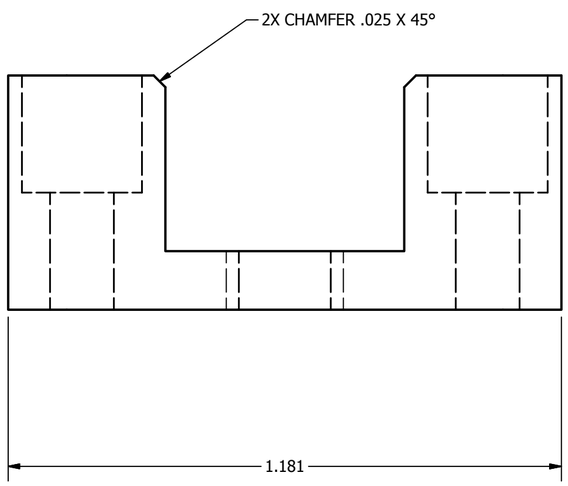


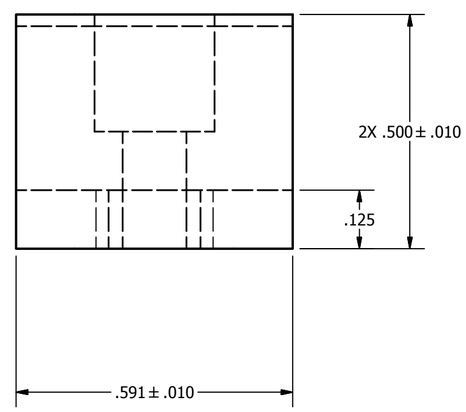


NOTICE:
INFORMATION CONTAINED IN THIS DOCUMENT OR ANY REPRODUCTION THEREOF, IS PROPRIETARY INFORMATION AND PROPERTY OF HOWARD HUGHES MEDICAL INSTITUTE. IT SHALL NOT BE DISCLOSED, COPIED, DUPLICATED OR USED FOR MANUFACTURE, PRODUCTION OR PROCUREMENT, WITHOUT THE EXPRESS WRITTEN PERMISSION OF HOWARD HUGHES MEDICAL INSTITUTE.

(UNLESS SPECIFIED OTHERWISE)
PRIMARY UNITS: INCHES
[SECONDARY UNITS]: MILLIMETERS

| PRIMARY TOLERANCES: | |
|---|---|
| X.X | ± 0.020 |
| X.XX | ± 0.010 |
| X.XXX | ± 0.005 |
| X.XXXX | ± 0.0005 |
| ANGULAR | ± 0.5 DEG |

- DO NOT SCALE DRAWING -

THIRD ANGLE PROJECTION:

HHMI
HOWARD HUGHES MEDICAL INSTITUTE

HHMI janelia farm research campus

# MPS Clamp Base.ipt

| SIZE | PART NUMBER | REV | SHEET |
|---|---|---|---|
| C | J002866 | - | 1 OF 1 |